Copyright © 2024 Silicon Content Technology

SCT8162X

If you have any questions please contact
wesley-lin@silicontent.com
sales@silicontent.com

Copyright © 2024 Silicon Content Technology

Copyright © 2024 Silicon Content Technology

→

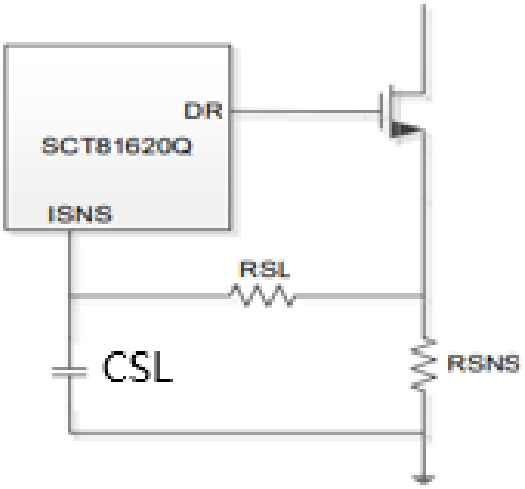

Copyright © 2024 Silicon Content Technology

Ω Ω

Copyright © 2024 Silicon Content Technology

Copyright © 2024 Silicon Content Technology

Δ Δ

Δ

Ω

Δ

Copyright © 2024 Silicon Content Technology

Ω Ω

Ω

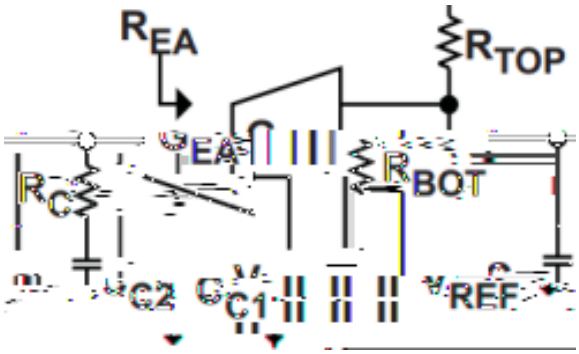

Ω Ω

Copyright © 2024 Silicon Content Technology

产品	控制拓扑	最小输入电压(V)	最大输入电压(V)	静态电流(μA)	电流保护模式	开关频率(Hz)	抖频功能	封装和管脚数
SCT81620	升压，反激，Sepic	3.2	50	450	Hiccup	100k-2.2M	√	MSOP-8
SCT81621	升压，反激，Sepic	3.1	50	415	Hiccup	100k-2.2M	√	MSOP-10
SCT81624	升压，反激，Sepic	3.1	50	415	恒流	100k-2.2M	-	MSOP-10
SCT81620Q	升压，反激，Sepic	3.2	50	450	Hiccup	100k-2.2M	√	MSOP-8
SCT81621Q	升压，反激，Sepic	3.1	50	415	Hiccup	100k-2.2M	√	MSOP-10
SCT81624Q	升压，反激，Sepic	3.1	50	415	恒流	100k-2.2M	-	MSOP-10

Copyright © 2024 Silicon Content Technology